ADDENDUM NO. 1

To: All Plan Holders of Record and Interested Parties

Project: Clinton County Satellite Office
Dewitt Garage
IIW Project No.: 11176-06

Issue Date: Friday, January 31, 2014

Bids Due: **2:00 PM, Monday, February 10, 2014**

The following additions, revisions, corrections, and clarifications contained herein shall become part of the Construction Contract Documents for the Project, and shall be included in the Scope of Work and Bid Proposals to be submitted. References made below to Specifications and Construction Drawings shall be used as a general guide only. Bidders shall determine for themselves the full scope of work affected by the Addendum items.

The following Addendum is part of the Construction Contract Documents dated January 20, 2014.

This Addendum consists of the following:
Addendum No. 1, 3 Pages
Addendum Drawings (4 Total): C/AD1-1 thru C/AD1-3, E/AD1-1
Plan Holders List, 1 Page

CHANGES/CLARIFICATION TO SPECIFICATIONS:

1. APPROVED MANUFACTURERS: The approved manufacturer is solely responsible for furnishing work which meets the design, performance, service and appearance criteria established by the specifications, and the Architect's decision will be final.
   a. SECTION 074619, 2.1,A: Metal Sales – Classic Rib

2. SECTION 012300, 3.1.A Alternate: "All driveway apron and sidewalk paving shall remain PCC concrete, as indicated in detail 6/C6.01. All pavement associated with generator and dumpster pad to remain PCC concrete"

3. SECTION 074619:
   a. 2.4,A.1: Change "PBU" to "PBR"
   b. 2.4,A.6: Change "26 gage" to "29 ga"
   c. 2.5.B Add Note – "Provide all trim and boxes for all electrical and mechanical devices and controls. Provide sealant around all sides of trim and mechanical/electrical devices."

CHANGES TO DRAWINGS:

1. SHEET G1.0 - Sheet List: Change sheet "E1.1" to "E1.0"

2. SHEET C6.02
   a. Detail 2: Replace with Detail 2 per Addendum Drawing C/AD1-1.
   b. Detail 3: Replace with Detail 3 per Addendum Drawing C/AD1-2.
   c. Detail 4: Replace with Detail 4 per Addendum Drawing C/AD1-2.

3. SHEET C6.10:
   a. Add to Note referencing retaining wall: "Contractor is to include all work associated with the retaining wall, including supplying the block, excepting the installation of the block (owner will install block and cap, and provide no other effort towards installation of wall). Refer to detail 3/C6.03 for retaining wall section."

   b. Refer to Addendum Drawing C/AD1-3 for modifications to generator and transformer pad information on northwest side of the site.

   c. Delete electrical conduit shown from the proposed sign location to the existing building. Refer to E1.0 Electrical Site Plan for electrical conduit to be supplied.

4. SHEET C10.10:
   a. Delete note: "Relocated Sign".

5. Sheet A6.1:
   a. Room Finish Schedule: Garage 100 – Add Note 3 to notes column.
   b. Room Finish Notes: Add Note 3 to read – "Paint all gas piping and supports as well as water piping insulation below ceiling to match ceiling finish."

6. Sheet S0.2:
   a. Detail 9: Change "See Arch" to "Varies per trench drain requirements, see plumbing".

7. Sheet S2.1
   a. Detail 8: Add Note "Sheathing shall be ¾" T&G Structural Exposure 1".
   b. Roof Framing Plan – Add header H1 over mechanical louver south of Link 103.
   c. Roof Framing Plan Notes: Note 1 – Change "19/32" to "15/32".

8. Sheet P1.1
   a. Plumbing Fixture Schedule – Change MS-1 to MB-1
   b. Plumbing Fixture Schedule – Change L-1 waste and vent to 2"
   c. Plumbing Plans – Add a 2" FD-1 in Toilet 101. Tie into 2" serving L-1.
   d. Plumbing Plans – Add tag CB-1 to 3 circles at outlet of TD-1

9. Sheet H1.1
   a. Diffuser & Grilles schedule - Change service for CD-1 from "return" to "supply"
   b. Diffuser & Grilles schedule - Add remark for CD-1 – Provide face operated volume damper for ceiling diffuser.
   c. HVAC Floor Plan - Add shut-off valves, union and dirt legs in gas piping serving RAD-1 and RAD-2.
   d. HVAC Floor Plan – Add TG-1 6x12 at top of chase space north of Toilet 101.
   e. Controls – Add note – Provide control panel as necessary to perform listed control sequences. Power for panel is the responsibility of this contractor.

10. SHEET E1.0:
   a. Electrical Floor Plan:
      i. Add Keyed Note 7 in Storage 102 adjacent to door 102.
      ii. Add Keyed Note 8 east of door 100B, east of garage door control for door 100A.
      iii. Clarification: Power is required at both ends of RAD-1 and RAD-2, so contractor to extend circuits to both ends as shown on drawing.
   b. Keyed Notes:
      i. Note 6: Add the following - "Route one empty conduit to south wall of Link 103 and terminate above acoustical ceiling. Route other conduit to Panel 1G and provide (3) three #10 AWG connected to circuit 21. Coordinate and provide connection to site sign."
      ii. Add Note 7 to read -"Provide Metalux WS-232A-UNV-ER81-U light fixtures centered in east and west sections of the attic. Mount fixtures on bottom of top chords of roof trusses. Provide a light switch at the entrance to the attic. Connect fixtures to lighting circuit 10.
      iii. Add Note 8 to read – "Provide a 4x4 box at 48" above finished floor for telephone/data with a

single gang cover plate adjacent to east garage door control. Provide ¾" conduit to accessible ceiling in Link 103".

c. Electric Panel Schedule: Change mounting from "surface" to "recessed".
d. General Notes: Add Note M: "All conduit asscciated with this project shall be concealed."
e. Lighting Fixture Schedule: Add Note to Type "S" fixture: "Fixtures shall be on circuit 17 and controlled by parking lot lighting photo cell."
f. Insert Card Reader Detail per Addendum Drawing E/AD1-1.

Sincerely,

Michael A. Ruden, AIA, NCARB, LEED AP	1/31/14 Signing Date
Ryan Larson, PE	1/31/14 Signing Date
Steven V. Sallwasser	1/31/14 Signing Date
Geoffry T. Blandin, PE	1/31/14 Signing Date
Eric J. Helminiak, PE	1/31/2014 Signing Date

It is required to acknowledge this addendum on the Bid Proposal Form.

END OF ADDENDUM NO. 1

CLASS B

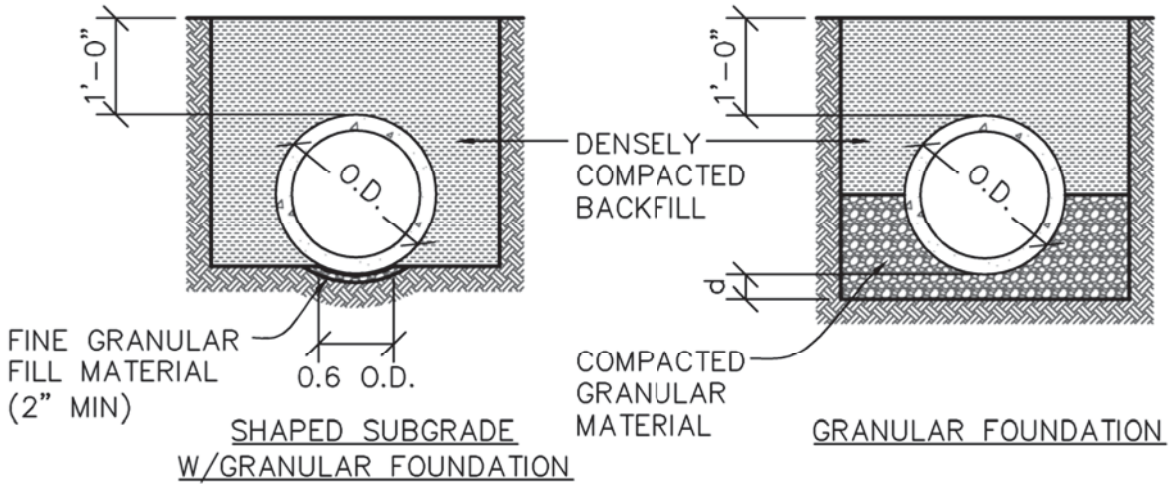

NOTE: FOR CLASS B BEDDINGS, SUBGRADE SHOULD BE EXCAVATED OR OVER-EXCAVATED, IF NECESSARY, SO A UNIFORM FOUNDATION FREE OF PROTRUDING ROCKS SHALL BE PROVIDED.

O.D.	OUTSIDE DIAMTER
D	INSIDE DIAMETER
d	DEPTH OF BEDDING MATERIAL BELOW PIPE
H	BACKFILL COVER ABOVE TOP OF PIPE

DEPTH OF BEDDING MATERIAL BELOW PIPE	
D	d (MIN)
27" & SMALLER	3"
30" TO 60"	4"
66" & LARGER	6"

NATURAL SOIL
TAMPED SOIL
GRANULAR BEDDING
FINAL BACKFILL
EMBEDMENT
ROCK

2 / C6.02 DETAIL
RCP BEDDING

NOT TO SCALE

IIW, P.C.
INTEGRITY.EXPERTISE.SOLUTIONS
www.iiwengr.com • 800.556.4491

© COPYRIGHT 2014 ALL RIGHTS RESERVED
THESE DOCUMENTS HAVE BEEN PREPARED SPECIFICALLY FOR THIS PROJECT ONLY. NO PART OF THIS DOCUMENT MAY BE REPRODUCED OR DISTRIBUTED IN ANY FORM WITHOUT THE PERMISSION OF IIW, P.C. ALL INFORMATION IN THIS DOCUMENT IS CONSIDERED PROPERTY OF IIW, P.C.

Project Description:

RCP BEDDING DETAIL

CLINTON COUNTY SATELLITE OFFICE - 2014
SITE CONSTRUCTION
DEWITT, IOWA

Y:\11\176\176-02\DRAWINGS\CIVIL\11176_ZZ ADDENDUM-1.DWG 1/31/2014 3:05:53 PM JERI M. VONDERA

Addendum Drawing Issue Information:

Drawing No:	C/AD1-1
Sheet:	1 OF 1
Date:	01/31/14
Drawn By:	TDC/JMV
Project No:	11176-06

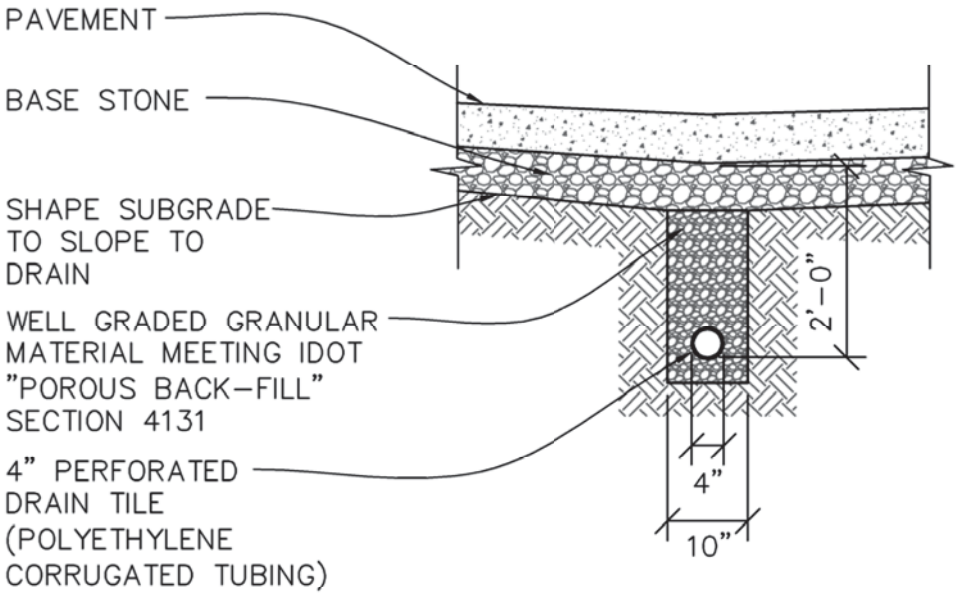

3 / C6.02 DETAIL
PARKING LOT SUBDRAIN

NOT TO SCALE

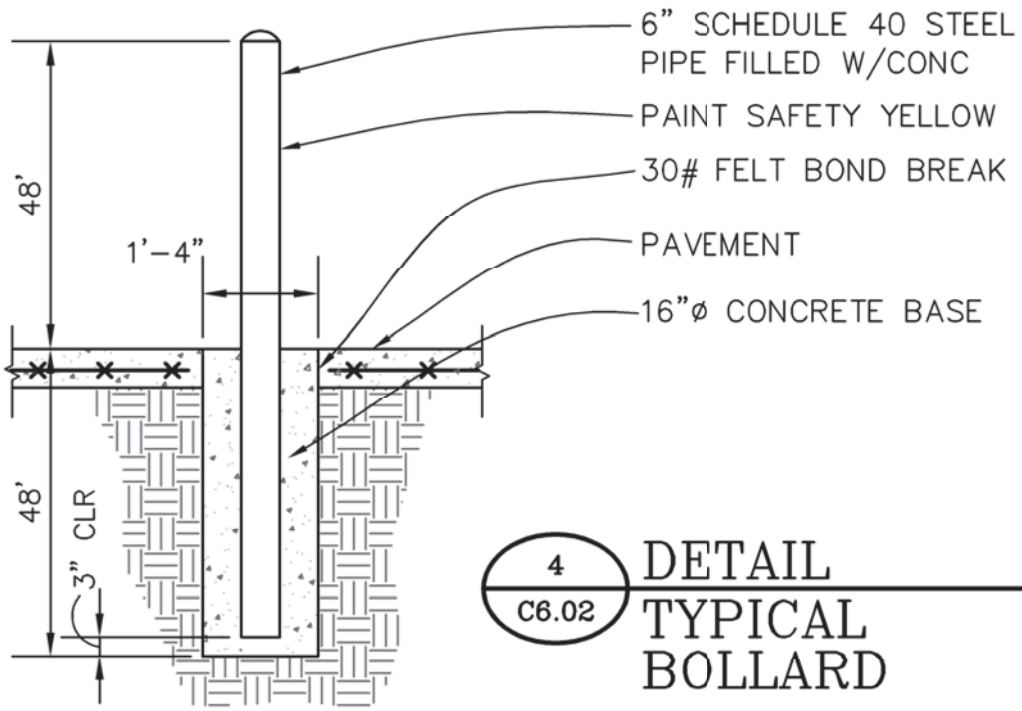

4 / C6.02 DETAIL
TYPICAL BOLLARD

NOT TO SCALE

IIW, P.C.
INTEGRITY.EXPERTISE.SOLUTIONS
www.iiwengr.com • 800.556.4491

© COPYRIGHT 2014 ALL RIGHTS RESERVED
THESE DOCUMENTS HAVE BEEN PREPARED SPECIFICALLY FOR THIS PROJECT ONLY. NO PART OF THIS DOCUMENT MAY BE REPRODUCED OR DISTRIBUTED IN ANY FORM WITHOUT THE PERMISSION OF IIW, P.C. ALL INFORMATION IN THIS DOCUMENT IS CONSIDERED PROPERTY OF IIW, P.C.

Project Description:

PARKING LOT SUBDRAIN DETAIL
& TYPICAL BOLLARD DETAIL
CLINTON COUNTY SATELLITE OFFICE - 2014
SITE CONSTRUCTION
DEWITT, IOWA

Y:\11\176\176-02\DRAWINGS\CIVIL\11176_ZZ ADDENDUM-1.DWG 1/31/2014 3:05:56 PM JERI M. VONDERA

Addendum Drawing Issue Information:

Drawing No:	C/AD1-2
Sheet:	1 OF 1
Date:	01/31/14
Drawn By:	TDC/JMV
Project No:	11176-06

NOTE;

1. COORDINATE BOX-OUT IN PAD FOR ELECTRICAL CONDUIT WITH OWNER
2. GENERATOR AND INSTALLATION OF GENERATOR ARE BY OTHERS AND NOT PART OF THIS CONTRACT

NORTH

HORIZONTAL SCALE IN FEET
0 10 20
DRAWING MAY HAVE BEEN REDUCED

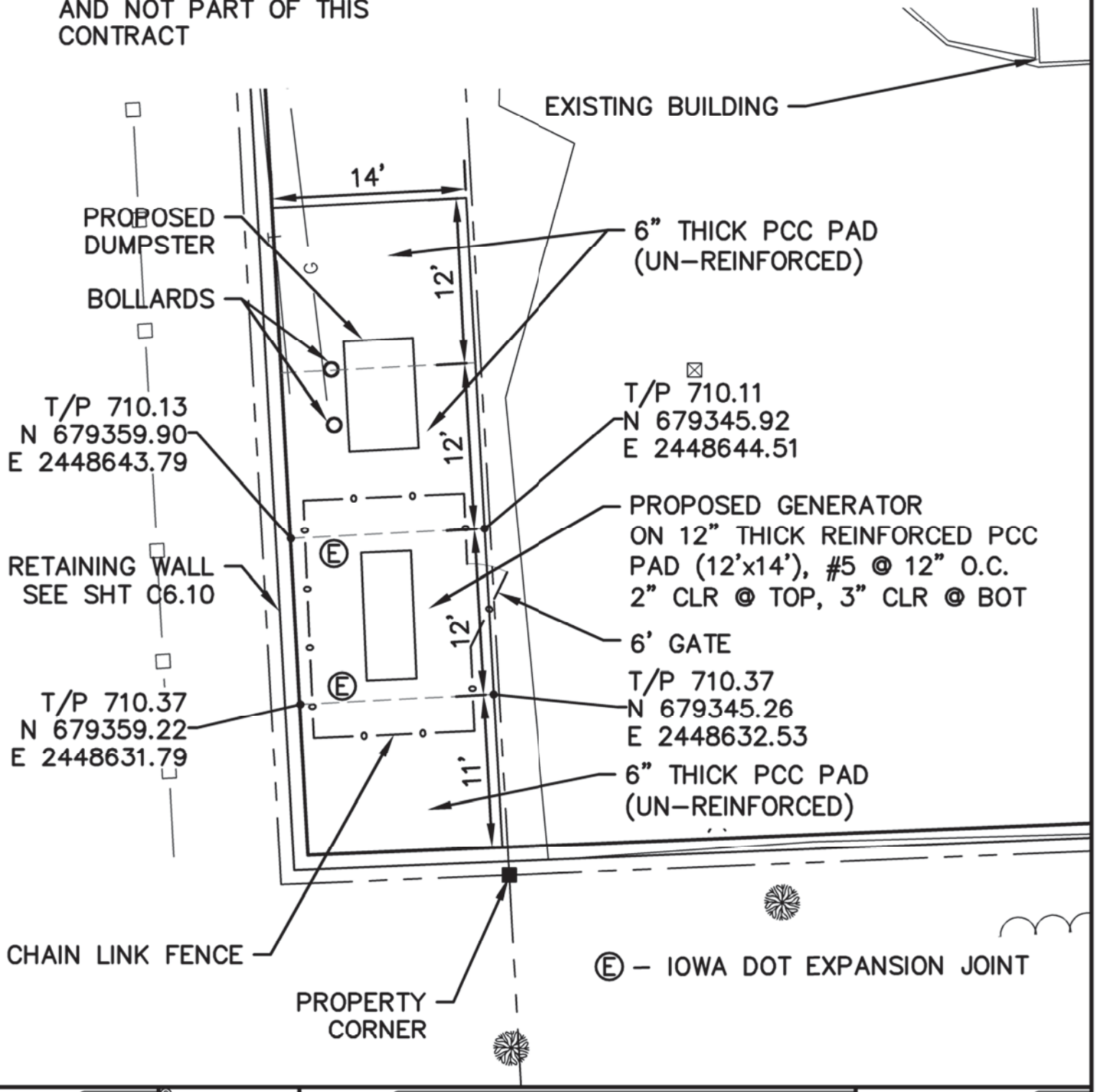

IIW, P.C.

INTEGRITY.EXPERTISE.SOLUTIONS

www.iiwengr.com • 800.556.4491

© COPYRIGHT 2014 ALL RIGHTS RESERVED
THESE DOCUMENTS HAVE BEEN PREPARED SPECIFICALLY FOR THIS PROJECT ONLY. NO PART OF THIS DOCUMENT MAY BE REPRODUCED OR DISTRIBUTED IN ANY FORM WITHOUT THE PERMISSION OF IIW, P.C. ALL INFORMATION IN THIS DOCUMENT IS CONSIDERED PROPERTY OF IIW, P.C.

Project Description:

GENERATOR PAD

CLINTON COUNTY SATELLITE OFFICE - 2014
SITE CONSTRUCTION
DEWITT, IOWA

Y:\11\176\176-02\DRAWINGS\CIVIL\11176_ZZ ADDENDUM-1.DWG 1/31/2014 3:06:03 PM JERI M. VONDERA

Addendum Drawing Issue Information:

Drawing No:	C/AD1-3
Sheet:	1 OF 1
Date:	01/31/14
Drawn By:	TDC/JMV
Project No:	11176-06

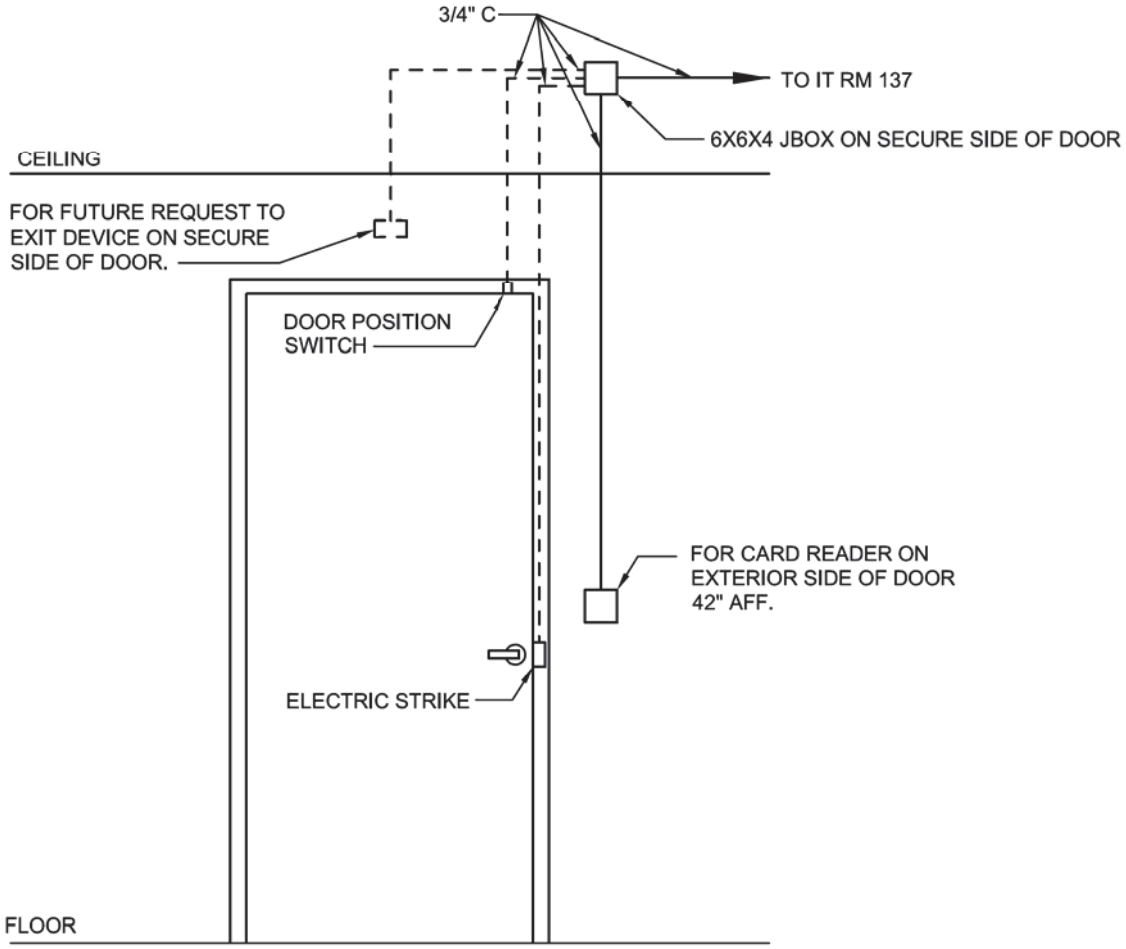

1 CARD READER DETAIL
NO SCALE

INTEGRITY.EXPERTISE.SOLUTIONS

iiw ENGINEERS & SURVEYORS, P.C.

COPYRIGHT 2014 ALL RIGHTS RESERVED
NO PART OF THIS DOCUMENT MAY BE REPRODUCED OR DISTRIBUTED IN ANY FORM WITHOUT THE PERMISSION FROM IIW ENGINEERS & SURVEYORS, P.C. ALL INFORMATION IN THIS DOCUMENT IS CONSIDERED PROPERTY OF IIW, P.C.

Project Description:

CARD READER DETAIL
CLINTON COUNTY SATELLITE OFFICE DEWITT GARAGE

Addendum Drawing Issue Information:

Drawing No:	E/AD1-1
Sheet:	1 OF 1
Date:	01/31/14
Drawn By:	SVS
Project No:	11176-06

IIW Planholders List

Clinton County Satellite Office - Dewitt Garage- 2014

Project Team	**Mark Fassbinder**	**Bid Date**	**February 10, 2014**
		Bid Time	**2:00 p.m.**
Project No.	**11176-06**	**Addenda**	**1**

Company	Mailing Address	Phone
Busch Constr.	5401 Victoria Avenue, Davenport, IA 52807	563-344-3791
Clinton Engineering	2101 Lincolnway, Clinton, IA	563-242-5732
DeWitt Electric	2417 260th Ave, DeWitt, IA 52742	563-659-8131
Domestic Plumbing Co.	PO Box 875, Clinton, IA 52732	563-242-0022
Holst construction	208 11th St., DeWitt, IA	563-659-5589
Holst construction	208 11th St., DeWitt, IA	563-659-5589
Jansen Electric Inc.	PO Box 94, DeWitt, IA 52742	563-659-1100
Sheets Design Builders	18284 Hwy 64 West, Maquoketa, IA 52060	563-652-8399
Stickley Electric	113 Western Avenue, Maquoketa, IA 52060	563-652-2439
Trenkamp Electric	PO Box 184, 21 County Rd, Miles, IA 52064	563-682-7944